BLOWER EKZ 275 - 70

Model: EKZ 275 - 70

Pressure: 480 (mbar) 7 (Psi)

Phase: Three

Weight: 43 (kg)

Power: 4.6 (kw)

Air Flow: 275 (m3/h)

Sound: 74 dB (A)

Vacuum: - 410 (mbar)

Frequency: 60 (Hz)

Stage: Double

Voltage: 208 - 220 V / 440 - 460 V

Suction and discharge Ports: 2” NPT

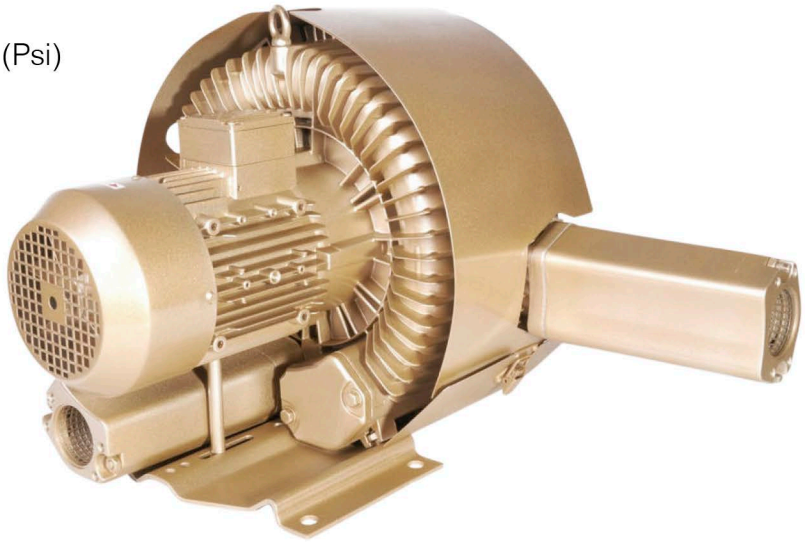

Vaccum Selection Curve

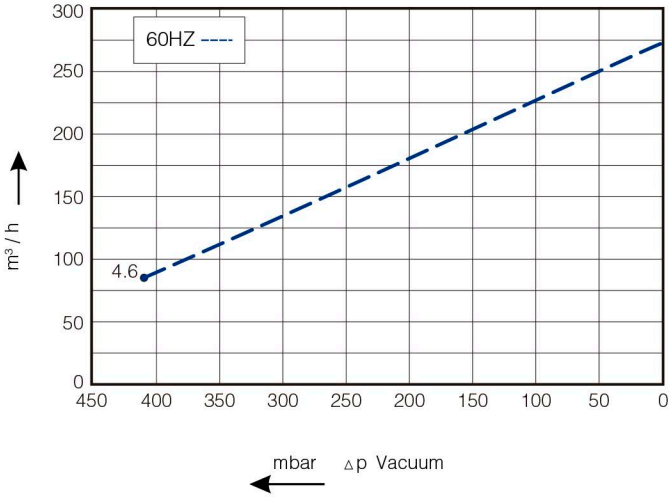

Pressure Selection Curve

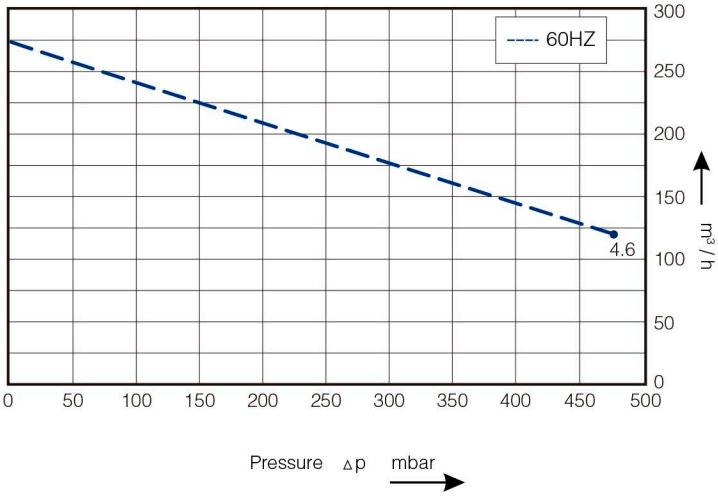

Dimensions

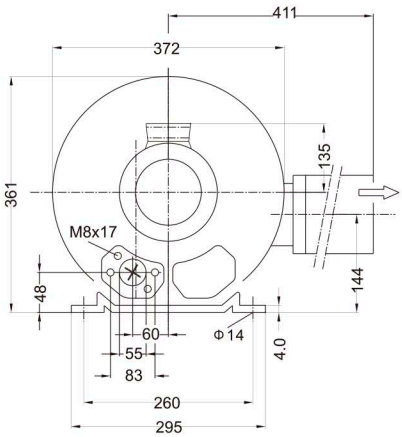

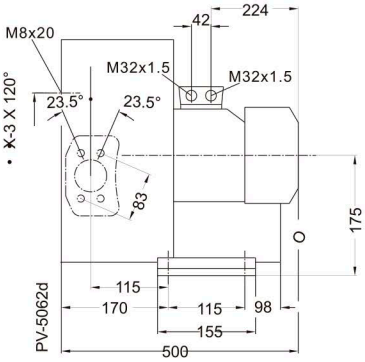

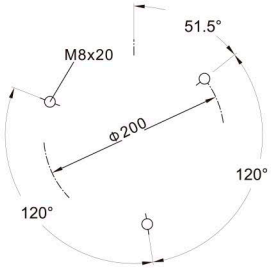

ekko Pumps